SFP 2.5G 1550nm/1310nm Single mode Optical Transceiver

Description

The BlueOptics© BO15E5531620D SFP transceiver is a high performance, cost effective module supporting data-rate up to 2.5Gbps with 20 Kilometer link length on single mode fiber.

BlueOptics© transceivers are 100% compliant with SFP Multi-Source Agreement (MSA).

All BlueOptics© SFP transceivers are also available with digital diagnostic function compliant to MSA SFF-8472.

Using digital diagnostic, BlueOptics© SFP transceivers provide the following real time information:

- Supply voltage
- Laser bias current
- Laser average output power
- Laser received input power
- Temperature

The transceiver consists of up to five sections: A DFB laser transmitter, a PIN photodiode, a trans-impedance preamplifier (TIA), the LD Driver and the optional digital diagnostic function.

Applications

- ✓ Gigabit Ethernet
- ✓ 1x Fibre Channel
- ✓ SDH / SONET
- ✓ Router/Server Interface
- ✓ Other optical links

Features

- ✓ Up to 2.5Gb/s data links with DDM
- ✓ DFB laser transmitter
- ✓ PIN photo-detector
- ✓ Up to 20km on 9/125µm SMF
- ✓ Hot-pluggable SFP footprint
- ✓ Simplex LC/UPC type pluggable optical interface
- ✓ Low power dissipation
- ✓ Metal enclosure, for lower EMI
- ✓ RoHS compliant and lead-free
- ✓ Single +3.3V power supply
- ✓ Compliant with SFF-8472
- ✓ Case operating temperature
  - Commercial: 0°C to +70°C
  - Extended: -10°C to +80°C
  - Industrial: -40°C to +85°C

Warnings

Handling Precautions: This device is susceptible to damage as a result of electrostatic discharge (ESD). A static free environment is highly recommended.

Laser Safety: Even small radiation emitted by laser devices can be dangerous to human eyes and lead to permanent eye injuries. Be sure to avoid eye contact with direct or indirect radiation.

Warranty

Every BlueOptics© transceiver comes with a 5 year replacement warranty and lifetime support.
For a warranty inquiry, please contact your CBO sales representative.
This warranty only covers the first user of the equipment.

Important Notice

Performance figures, data and any illustrative material provided in this data sheet are typical and must be specifically confirmed in writing by CBO before they become applicable to any particular order or contract. In accordance with the CBO policy of continuous improvement specifications may change without notice.

The publication of information in this data sheet does not imply freedom from patent or other protective rights of CBO or others.

Further details are available from any CBO sales representative.

Installation

Before installation attach an ESD-preventive wrist to ensure not to damage the transceiver or hardware.

BlueOptics© BO15E5531620D can be installed in any Small Form Factor Pluggable (SFP) port. You can install the BO15E5531620D regardless if the system is powered on or off, because it is hot-swappable.

Open the bale clasp by pressing it down and insert the transceiver into the SFP port.

You can now connect your cable.

Order Information

Part No.	Temp.	DDM
BO15E5531620D	0°C to +70°C	✓
BO15E5531620DEX	-10°C to +80°C	✓
BO15E5531620DIN	-40°C to +85°C	✓

Regulatory Compliance

Feature	Standard	Co.
Electrostatic Discharge (ESD)	- IEC/EN 61000-4- 2	✓
Electromagnetic Interference (EMI)	- FCC Part 15 Class B EN 55022 - Class B (CISPR 22A)	✓
Laser Eye Safety	- FDA 21CFR 1040.10, 1040.11 - IEC/EN 60825-1, 2	Class 1 ✓
Component Recognition	- IEC/EN 60950, UL	✓
RoHS	- 2002/95/EC	✓
EMC	- EN61000-3	✓

1. Absolute Maximum Ratings

Parameter	Symbol	Min.	Typ.	Max.	Unit
Storage Temperature	Ts	-40		85	ºC
Storage Ambient Humidity	HA	5		95	%
Power Supply Voltage	VCC	-0.5		4	V
Signal Input Voltage		-0.3		Vcc+0.3	V
Receiver Damage Threshold		+5			dBm

2. Recommended Operating Conditions

Parameter	Symbol	Min.	Typ.	Max.	Unit	Note
		0		70		BO15E5531620D
		-10		80	ºC	BO15E5531620DEX
		-40		85		BO15E5531620DIN
Ambient Humidity	HA	5		70	%	
Power Supply Voltage	VCC	3.13	3.3	3.47	V	
Power Supply Current	ICC			280	mA	
Power Supply Noise Rejection				100	mVp-p	100Hz to 1 MHz
Data Rate			1250/1250		Mbps	TX Rate/ RX Rate
Transmission Distance				20	KM	
Coupled Fiber	Single mode fiber					9/125um SMF

3. Electrical Interface Characteristics

Parameter	Symbol	Min.	Typ.	Max.	Unit	Note
Transmitter						
Total Supply Current	I_{CC}			A	mA	1
Transmitter Disable Input-High	V_{DISH}	2		Vcc+0.3	V	
Transmitter Disable Input-Low	V_{DISL}	0		0.8	V	
Transmitter Fault Input-High	V_{DISL}	2		Vcc+0.3	V	
Transmitter Fault Input-Low	V_{TxFH}	0		0.8	V	
Receiver						
Total Supply Current	I_{CC}			B	mA	1
LOSS Output Voltage-High	V_{LOSH}	2		VCC+0.3	V	
LOSS Output Voltage-Low	V_{LOSL}	0		0.8	V	

Notes:

1. A + B = 280mA (without termination circuit)

4. Transmitter Specifications - Optical

Parameter	Symbol	Min.	Typ.	Max.	Unit	Note
Average Output Power	P_{OUT}	-5		0	dBm	
Extinction Ratio	ER	8.2			dB	
Center Wavelength	λC	1530	1550	1570	nm	BO15E5531620D
Side Mode Suppression Ratio	SMSR	30			dB	
Spectrum Bandwidth(-20dB)	σ			1	nm	
Transmitter OFF Output Power	P_{Off}			-45	dBm	
Differential Line Input Impedance	RIN	90	100	110	Ohm	
Jitter P-P	t_J	0		0.1	UI	1
Output Eye Mask	Compliant with IEEE802.3 z (class 1 laser safety)					2

Notes:

1. Measured at 2^7-1 non-return-to-zero PRBS pattern.
2. Transmitter eye mask definition.

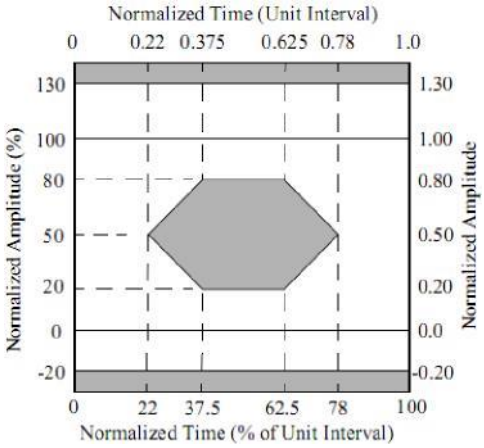

5. Receiver Specifications - Optical

Parameter	Symbol	Min.	Typ.	Max.	Unit	Note
Input Optical Wavelength	λ_{IN}	1270	1310	1360	nm	BO15E5531620D
Receiver Sensitivity	P_{IN}			-19	dBM	1
Input Saturation Power (Overload)	P_{SAT}	-1			dBm	
LOS Assert	P_A	-35			dBm	
LOS De-assert	P_D			-20	dBm	
LOS Hysteresis	P_A-P_D	0.5	2	6	dB	

Notes:

1. Measured with Light source 1550nm/1310nm, ER=9dB; BER =<10^{-12} @PRBS=2^7-1 non-return-to-zero.

6. SFP to Host Connector Pin Out

Pin	Symbol	Name / Description	Note
1	VeeT	Transmitter Ground	1
2	TX Fault	Transmitter Fault Indication	
3	TX Disable	Transmitter Disable	2
4	MOD-DEF2	Module Definition 2	3
5	MOD-DEF1	Module Definition 1	3
6	MOD-DEF0	Module Definition 0	3
7	Rate Select	Not Connected	4
8	LOS	Loss of Signal	5
9	VeeR	Receiver Ground	1
10	VeeR	Receiver Ground	1
11	VeeR	Receiver Ground	1
12	RD-	Inv. Received Data Out	
13	RD+	Received Data Out	
14	VeeR	Receiver Ground	1
15	VeeR	Receiver Power	

16	VccT	Transmitter Power	
17	VeeT	Transmitter Ground	1
18	TD+	Transmit Data In	
19	TD-	Inv. Transmit Data In	
20	VeeT	Transmitter Ground	1

Notes:

1. Circuit ground is isolated from chassis ground.
2. TX Disable is an input that is used to shut down the transmitter optical output. It is pulled up within the module with a 4.7k - 10kΩ resistor. Its states are:

   Low (0 – 0.8V): Transmitter on
   (>0.8V, < 2.0V): Undefined
   High (2.0 – 3.465V): Transmitter Disabled
   Open: Transmitter Disabled
3. These are the module definition pins. They should be pulled up with a 4.7k - 10kΩ resistor on the host board. The pull-up voltage shall be VccT or VccR.
   Mod-Def 0 is grounded by the module to indicate that the module is present
   Mod-Def 1 is the clock line of two wire serial interface for serial ID
   Mod-Def 2 is the data line of two wire serial interface for serial ID
4. Should be pulled down with a > 30kΩ resistor. Following input states can be used:

   Low (0 – 0.8V): Reduced Bandwidth
   (>0.8, < 2.0V): Undefined
   High (2.0 – 3.465V): Full Bandwidth
   Open: Reduced Bandwidth
5. This is an open collector output, which should only be pulled with a resistor of 4.7k - 10kΩ. Pull up voltage between 2.0V and 3.6V. Logic 1 indicates loss of signal; logic 0 indicates normal operation. The output will be pulled to less than 0.8V.

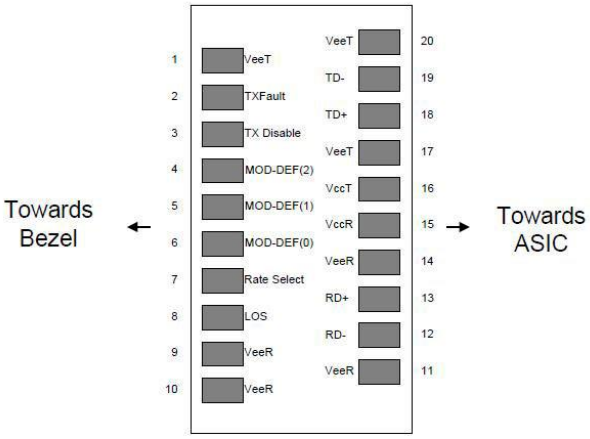

Pinout of Connector Block on Host Board

7. EEPROM Information

The SFP MSA defines a 256-byte memory map in EEPROM describing the transceivers capabilities, standard interfaces, manufacturer, and other information, which is accessible over a 2 wire serial interface at the 8-bit address 1010000X (A0h).

Data Address	Field Size (Bytes)	Name of Field	Contents (Hex)	Description
0	1	Identifier	XX	Formfactor
1	1	Ext. Identifier	XX	
2	1	Connector	XX	
3-10	8	Transceiver	XX XX XX XX XX XX XX XX	Transmittter Code
11	1	Encoding	XX	
12	1	BR, Nominal	XX	Transceiver Speed
13	1	Reserved	00	
14	1	Length (9µm) km	XX	Max. link length in KM
15	1	Length (9µm) 100m	XX	Max. link length in M
16	1	Length (50µm) 10m	XX	Max. link length in M
17	1	Length(62.5µm)10m	XX	Max. link length in M
18	1	Length (Copper)	XX	Max. link length in M
29	1	Reserved	00	
30-35	16	Vendor name	XX XX XX XX XX XX XX XX XX XX XX XX XX XX XX XX	Vendor name - OEM
36	1	Reserved	00	
37-39	3	Vendor OUI	XX XX XX	
40-55	16	Vendor PN	XX XX XX XX XX XX XX XX XX XX XX XX XX XX XX XX	Product Number - depending on Part
56-59	4	Vendor rev	XX XX XX XX	Vendor revision
60-61	2	Wavelength	XX XX	Transceiver Wavelength
62	1	Reserved	00	
63	1	CC BASE	XX	Checksum of bytes 0-62
64-65	2	Options	XX XX	
66	1	BR, max	XX	
67	1	BR, min	XX	
68-83	16	Vendor SN	XX XX XX XX XX XX XX XX XX XX XX XX XX XX XX XX	Part serial number
84-91	8	Vendor date code	XX XX XX XX XX XX 20 20	Year, Month, Day
92	1	Diagnostic type	XX	Diagnostics
93	1	Enhanced option	XX	Diagnostics
94	1	SFF-8472	XX	Diagnostics
95	1	CC_EXT	XX	Checksum of bytes 64-94
96-255	160	Vendor Specific		

8. Digital Diagnostics / Digital Optical Monitoring

The transceiver provides serial ID memory contents and diagnostic information about the present operating conditions by the 2-wire serial interface (SCL, SDA).

The diagnostic information with internal calibration or external calibration are all implemented, including received power monitoring, transmitted power monitoring, bias current monitoring, supply voltage monitoring and temperature monitoring.

9. Recommended Interface Circuit

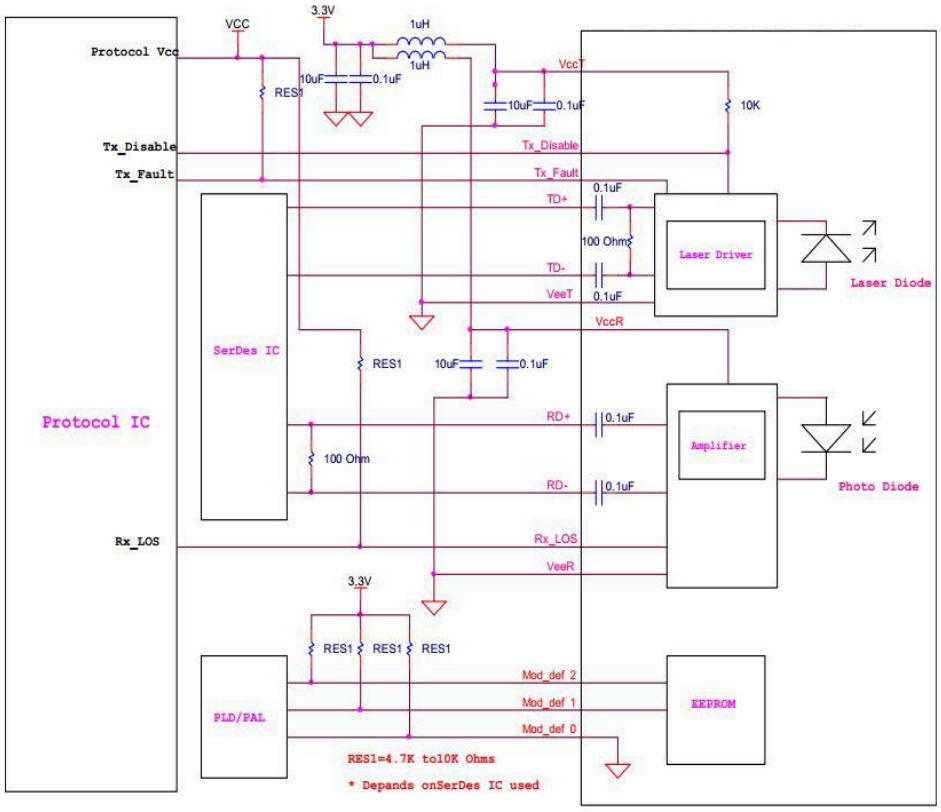
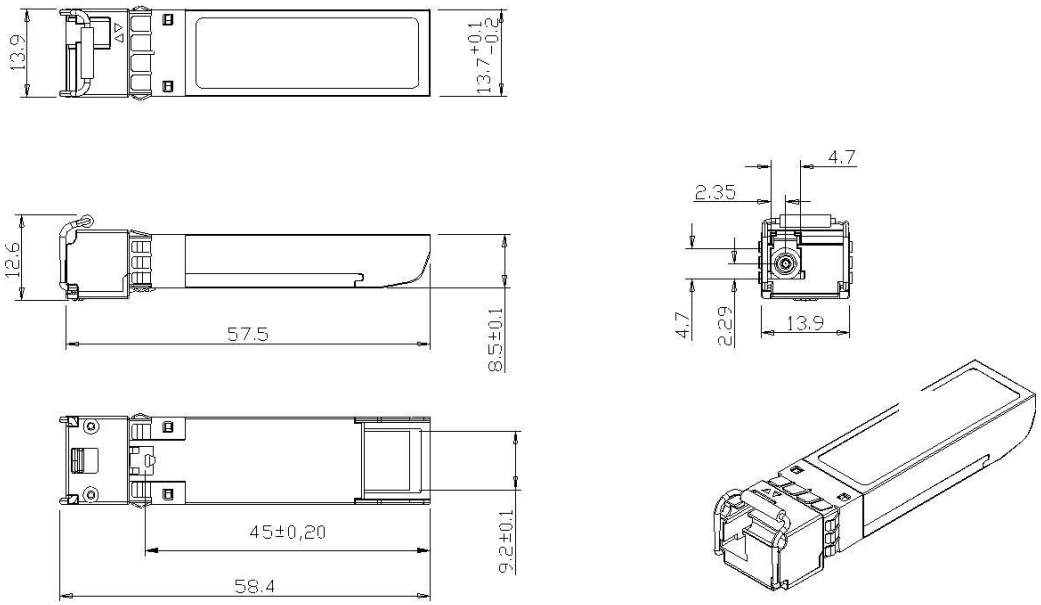
10. Mechanical Specifications (Unit: mm)